ChE laboratory

A COMPUTER-CONTROLLED HEAT EXCHANGE EXPERIMENT*

JACK FAMULARO
Manhattan College
Riverdale, NY 10471

THE COMPUTER-CONTROLLED heat exchange experiment is one of several experiments utilizing microcomputers in the senior chemical engineering laboratory course at Manhattan College. The objectives of the experiment are as follows:

- **To become acquainted with the components present in a digital control system and the application of computers for data acquisition, data analysis, and control.**
- **To investigate instability in a feedback control system from open-loop frequency response experiments and closed-loop continuous cycling experiments.**
- **To evaluate system performance with Ziegler-Nichols [1, 2, 3] settings of the parameters in a PID controller.**
- **To demonstrate the use of an error-squared integral objective function in achieving optimum control.**

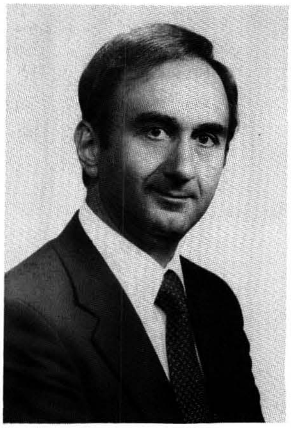

Jack Famularo received his BS, MS, and EngScD degrees from New York University and is an associate professor of chemical engineering at Manhattan College. His teaching responsibilities are primarily in the areas of fluid mechanics and heat and mass transfer. He has been involved in the development of experiments for the senior chemical engineering laboratory at Manhattan College and his research interests are in water and wastewater treatment processes.

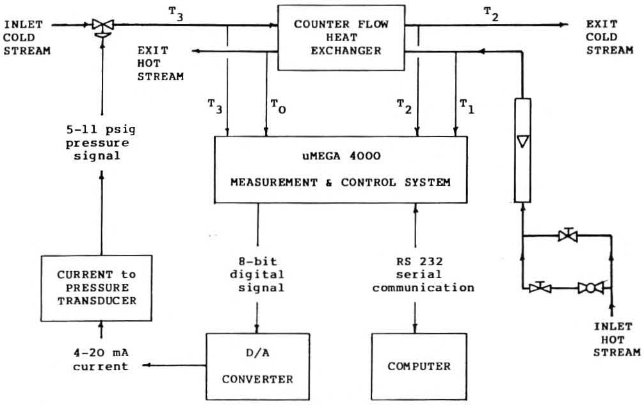

FIGURE 1. Schematic diagram of heat exchanger control system.

In the first part of the experiment, conducted in the first lab period, the open-loop frequency response of the system is examined by introducing a sinusoidal variation in the inlet cold stream flow rate and plotting the cyclic variation of the exit hot stream temperature. Bode plots are constructed to obtain the maximum controller gain, $K_{c,max}$, and the ultimate period, P_u, of the system.

In the second part of the experiment, conducted in the second lab period, new values of $K_{c,max}$ and P_u are determined by the continuous cycling method. The values of $K_{c,max}$ and P_u obtained from both methods are used to determine Ziegler-Nichols control parameters. Performance of the control system with these parameters is examined by introducing a step disturbance in hot stream flow rate. After completing the Ziegler-Nichols runs, exploratory runs at different settings are conducted with the objective of minimizing an error-squared integral objective function.

EXPERIMENTAL PROCEDURE

A schematic diagram of the experimental system is shown in Figure 1. A description of system components and details of the experimental procedure are given by Famularo [4]. The controlled variable is the exit hot stream temperature and the manipulated

---

*This paper is based on a paper that has been previously published in the ASEE 1986 Annual Conference Proceedings.

variable is the cold stream flow rate. Water is the process fluid for both streams. Step disturbances in the hot stream flow rate are produced with a quick-opening ball valve in the piping system upstream from the rotameter. Inlet and exit stream temperatures are monitored; however, only the exit hot stream temperature is employed in the control system.

The experiment is conducted in two laboratory periods, and involves the completion of the following tasks:

Period 1

1. Determination of the effluent hot water temperature corresponding to different control valve settings.
2. Determination of $K_{c,max}$ and P_u from open-loop frequency response data.

Period 2

1. Determination of $K_{c,max}$ and P_u by the continuous cycling method.
2. Evaluation of control system performance using Ziegler-Nichols settings.
3. Determination of optimum controller settings.

Steady-state runs are conducted to determine the effluent hot water temperature at several cold water flow rates. Runs are conducted at Q/Q_{max} equal to 0.2, 0.5, and 0.8, with an inlet hot water temperature of 70°C and a hot water flow rate of 60% of the full rotameter capacity. The effluent hot water temperature from the steady-state run at Q/Q_{max} equal to 0.5 serves as the reference temperature in automatic control runs.

In open-loop operation of the heat exchanger control system, the loop is broken after the control algorithm is executed in the computer, as shown in Figure 2. Q/Q_{max} is controlled to follow the sinusoidal equation

$$q = q^\circ + A*\sin(360*f*t) \tag{1}$$

where $q = Q/Q_{max}$, q° = q at the midpoint of the sine wave, A = amplitude, f = frequency in cycles per minute, and t = time in minutes. Runs are conducted with $q^\circ = 0.5$ and $A = 0.3$, producing sine waves ranging from 0.2 to 0.8.

During the execution of a frequency response run, the time, cold water flow rate, and temperatures are displayed at the terminal and are written to a disk file. This file is accessed at a later time to produce a graph of the run in which the controlled variable, T_0, is presented as the dimensionless temperature,

$$TAU = (T_{max} - T_0)/(T_{max} - T_{min}) \tag{2}$$

where T_{max} is larger than the greatest value of T_0 and T_{min} is smaller than the smallest value of T_0 observed during the run.

> **In the first part of the experiment . . . the open-loop frequency response of the system is examined by introducing sinusoidal variation in the inlet cold stream flow rate and plotting the cyclic variation of the exit hot stream temperature.**

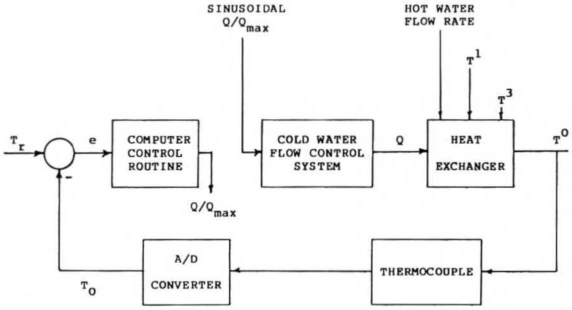

FIGURE 2. Block diagram for open-loop frequency response runs.

Although the response of TAU to the sinusoidal variation of Q/Q_{max} is cyclic and of the same frequency as the input, TAU does not follow a sine wave. This fact is illustrated in the graph in Figure 3. The time lag during the portion of the cycle in which the cold water flow rate reaches its maximum value of 0.8 is less than the time lag when the cold water flow rate is at its minimum value of 0.2. This is explained by the fact that the film heat transfer coefficient on the cold water side of the exchanger increases as the flow rate increases, causing the effluent hot water temper-

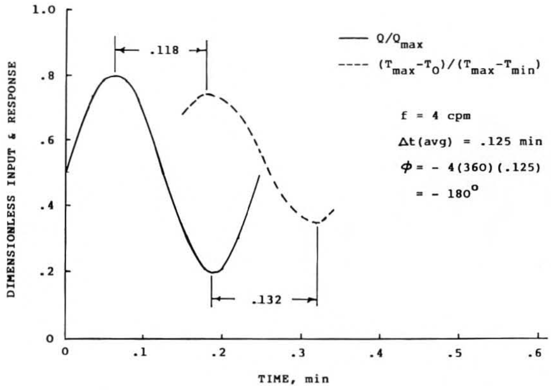

FIGURE 3. Determination of frequency response phase angle.

ature to respond more rapidly. A Bode plot analysis of the frequency response data can be made by calculating the phase angle from the average time lag of the response of TAU, as shown in Figure 3.

Students conduct a Bode analysis of the frequency response data prior to the second laboratory period. The objective of this analysis is to determine the gain corresponding to marginal stability, $K_{c,max}$, and the ultimate period, P_u, of the system. Figure 4 and Figure 5 are Bode plots from a series of frequency response runs conducted on the system. The parameters deduced from the plots are as follows: $K_{c,max} = 1/7 = 0.14°C^{-1}$, $P_u = 1/4 = 0.25$ min.

PERIOD 2 PROCEDURE

All experimentation in the second lab period is conducted with the heat exchanger operating under closed-loop automatic control. A control algorithm is included in the software which approximates the following proportional-integral-derivative (PID) action

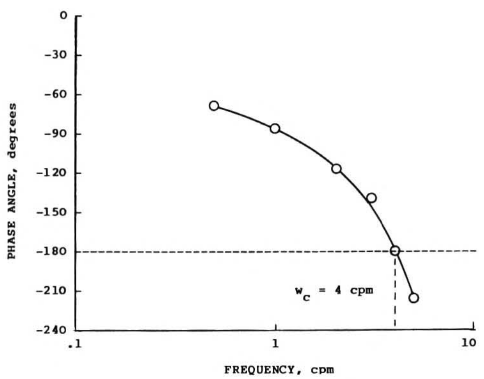

FIGURE 4. Phase angle vs *frequency Bode plots.*

$$q = -K_c\left(e + \frac{1}{t_i}\int e\,dt + t_d\frac{de}{dt}\right) + q° \qquad (3)$$

where q = fractional flow rate of cold water, q° = flow rate with zero control action, e = error in °C, K_c = controller gain in $°C^{-1}$, t_i = integral time in minutes, and t_d = derivative time in minutes.

Operation of the system has revealed that T_0 can experience random changes in temperature by as much as 0.2 C°. These fluctuations are due to "noise" in the system and do not represent actual changes in water temperature. The presence of a random temperature error influences the manner in which the error and error derivative are calculated for use in the control algorithm. First, with respect to e, instead of using a single set point temperature, T_r, the error is defined in terms of distance from a set point band.

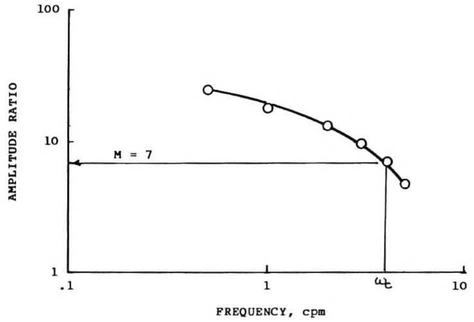

FIGURE 5. Amplitude ratio vs *frequency Bode plot.*

The upper boundary of the set point band, T^*, is defined as $T_r + E_t$, where E_t is the absolute value of the temperature error. The lower boundary is $T_* = T_r - E_t$, and the error in the control equation is calculated as follows

If $T_* < T_0 < T^*$, then $e = 0$

If $T_0 < T_*$, then $e = T_* - T_0$

If $T_0 > T^*$, then $e = T^* - T_0$

Since "noise" in T_0 can cause erratic changes in de/dt, this derivative can not be calculated using only two consecutive temperature scans. In the control software the derivative at a specific time is calculated using the current scan and two preceding scans. A least-squares line is determined for these three points and de/dt is calculated from the slope of the line.

● Determination of $K_{c,max}$ and P_u by the Continuous-Cycling Method

A discussion of the continuous-cycling method of determining $K_{c,max}$ and P_u may be found in Harriott [2]. It is an experimental procedure that involves operation of the system under closed-loop automatic control with only proportional action. Successive runs are conducted at increased values of K_c until a step disturbance causes cycling at a constant amplitude. The cor-

TABLE 1
Marginal Stability Parameters

$K_{c,max}$ ($°C^{-1}$)	P_u (min)	Footnote
0.14	0.25	§
0.18	0.28	†

§ Obtained from open-loop frequency response
† Obtained from continuous-cycling

responding value of K_c is $K_{c,max}$ and the period of cycling at the maximum gain is the ultimate period, P_u.

Operation under only proportional control is achieved by setting the derivative time and the reciprocal of the integral time equal to zero. Each run is conducted in the same fashion. The system is operated for one-half minute with the ball valve open and 80% hot water flow rate. The time is recorded and the ball valve is closed to produce a step change in hot water flow rate from 80 to 40% of the rotameter range. The response of the system is observed at the computer terminal, and if it appears that the oscillations are decaying in amplitude, the run is stopped and a new run is started at a higher value of K_c. This process is continued until the system is clearly unstable, as evidenced by cycling in the cold water flow rate from $Q/Q_{max} = 0$ to 1. At this point, K_c is reduced in magnitude in small increments with the objective of finding the smallest value of K_c that produces cycling without decay. The period in minutes of the corresponding cycling in T_0 is P_u.

TABLE 2
Ziegler-Nichols Controller Settings

K_c (°C^{-1})	t_i (min)	t_d (min)	Footnote
.063	.208	0	§
.084	.125	.0312	§
.081	.233	0	†
.108	.140	.0350	†

§ Based on open-loop frequency response
† Based on continuous cycling

The values of $K_{c,max}$ and P_u obtained by the continuous-cycling method compare quite well with the same parameters obtained from frequency response experiments, as revealed in Table 1.

● Closed-Loop Operation using Z-N Settings

Ziegler-Nichols (Z-N) controller settings are related to the marginal stability parameters through the following equations:

Proportional-Integral (PI)

$$K_c = 0.45\, K_{c,max}, \qquad t_i = P_u/1.2 \tag{4}$$

Proportional-Integral-Derivative (PID)

$$K_c = 0.6\, K_{c,max}, \qquad t_i = P_u/2, \qquad t_d = P_u/8 \tag{5}$$

The Z-N setting corresponding to the marginal stability parameters in Table 1 are listed in Table 2.

In all automatic control runs the input disturbance is a step change in hot water flow rate from 80% to 40% of full flow. A record of the response of the system is available in tabular and graphical form. The tabular output includes the cold water flow rate, the error integral, the error derivative, the objective function, and the system temperatures. The graphical output contains the error and objective function versus time.

The particular objective function employed in the computer software integrates the square of the error over time, as indicated below

$$F = \int e^2\, dt \tag{6}$$

Figures 6 and 7 show the response of the system with three of the sets of Z-N parameters listed in

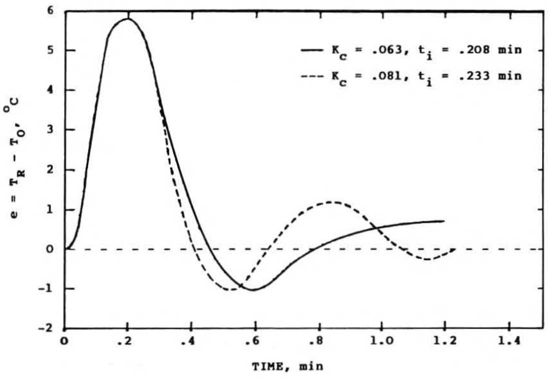

FIGURE 6. Closed-loop response to a step change in hot water flow rate using PI control with Ziegler-Nichols settings.

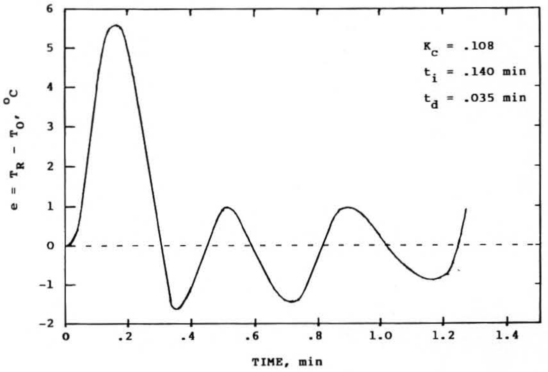

FIGURE 7. Closed-loop response to a step change in hot water flow rate using PID control with Ziegler-Nichols settings.

Table 2. An examination of the two PI runs in Figure 6 reveals that the best control is achieved using $K_c = 0.063$ and $t_i = 0.208$, the parameters based on the open-loop frequency response. The gain of $K_c = 0.081$ derived from continuous cycling experimentation is too large and caused excessive cycling.

The PID run with Z-N settings shown in Figure 7 represents poor control. However, this should be expected because derivative action is relatively ineffective in systems containing a large effective time delay. The heat exchanger control system contains time delays associated with flow from inlet to exit, and also time delays associated with the functioning of electronic components such as the A/D and D/A converters. In fact, an analysis of the Bode plots in Figures 4 and 5 leads to the following approximate open-loop transfer function

$$\frac{E(s)}{Q(s)} = \frac{37\ e^{-0.042s}}{(0.176s+1)(0.037s+1)} \qquad (7)$$

As can be seen from the above transfer function, the loop contains an effective time delay of 0.042 minutes (2.52 seconds). This time delay is roughly 25% of the major time constant of 0.176 minutes. At the critical frequency, the effective time delay accounts for 60 degrees of the total phase lag of 180 degrees and causes crossover to occur before the smaller time constant is able to reduce the amplitude ratio. Since the resultant amplitude ratio curve is not steep in the vicinity of the critical frequency, the phase lead contributed by derivative action does not justify increasing K_c very much above the value of K_c used in PI control. This fact is apparent from the poor system response using Z-N settings with PID control.

● Optimization of Controller Setting

After completing the Z-N runs, students are required to conduct several exploratory runs to improve upon the best of the Z-N runs. The goal is to find the combination of parameters that results in the smallest error-squared integral objective function, as defined in Eq. (6). The lower limit of integration is the time of upset and the upper limit of integration is the time required for the error to drop to, and remain below, an absolute value of 0.5°C.

A partial optimization of PI control parameters has revealed that the best parameters are $K_c = 0.06$, and $t_i = 0.208$. The corresponding objective function was found to be $F = 6.97$. It should be noted that these optimal parameters are almost identical to the Z-N settings in Table 2, derived from the open-loop frequency response data. Optimization runs were not conducted with PID control. Therefore, it is possible that some derivative action might produce a smaller objective function than 6.97; however the optimal PID parameters for this control system are not the Ziegler-Nichols recomendations.

REPORT

The lab report for the experiment includes all calculations and/or analyses associated with the determination of $K_{c,max}$ and P_u. Students are also asked to construct an open-loop transfer function from their Bode diagrams and to discuss the relative merits of PI and PID control for the heat exchange control system.

ACKNOWLEDGEMENT

The author wishes to acknowledge the assistance of two Manhattan College students, Elizabeth Schaub and Thomas Meloro, for their part in the preparation of software for this experiment. Ms. Schaub wrote the routines controlling the display of data at the computer monitor, and Mr. Meloro wrote the programs which graph the frequency response and automatic control runs on the dot-matrix printer.

REFERENCES

1. Coughanowr, D. R., and L. B. Koppel, *Process Systems Analysis and Control,* p. 241-248, McGraw-Hill, 1965.
2. Harriott, P., *Process Control,* p. 178-179, McGraw-Hill, 1964.
3. Stephanopoulos, G., *Chemical Process Control,* p. 349-354, Prentice-Hall, 1984.
4. Famularo, J., "A Computer-Controlled Heat Exchange Experiment," *Proceedings of the ASEE 1986 Annual Conference,* Cincinnati, Ohio, June 1986. ☐

ChE book reviews

FUNDAMENTALS OF HEAT EXCHANGER AND PRESSURE VESSEL TECHNOLOGY

by J. P. Gupta
Hemisphere Publishing Corporation,
Washington, DC (1986),
607 pages, $45.00

Reviewed by
Stuart W. Churchill
University of Pennsylvania

This book is entirely in the form of over 1200 questions and answers. It provides descriptions of various types of heat exchangers and pressure vessels, and also a discussion of the factors which favor the choice of one form over another for reasons of economics, safety, maintenance, *etc.* Both of these aspects are of direct interest in process design and operation. The